Electronics
A to D and D to A Converters

Terry Sturtevant

Wilfrid Laurier University

June 24, 2015

Digital to Analog Converter

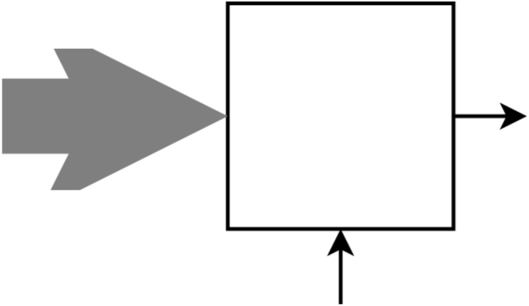

Digital to Analog Converter

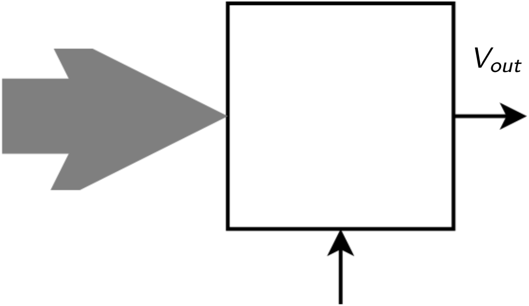

Digital to Analog Converter

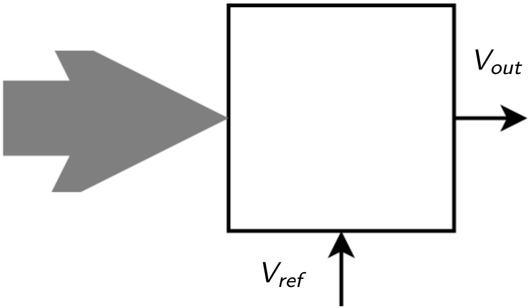

Digital to Analog Converter

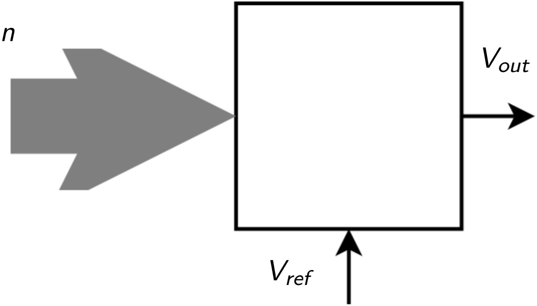

Operation

Operation

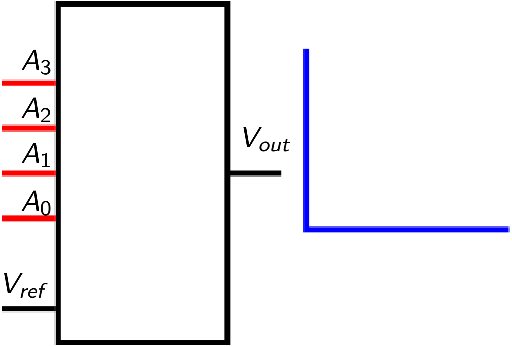

Operation

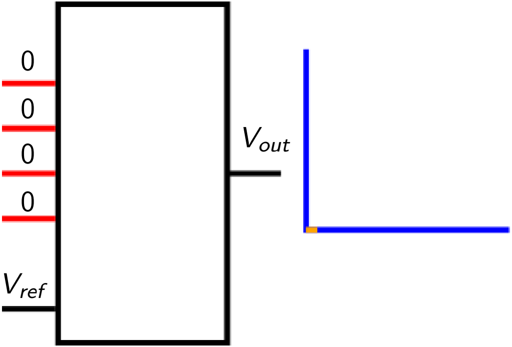

Operation

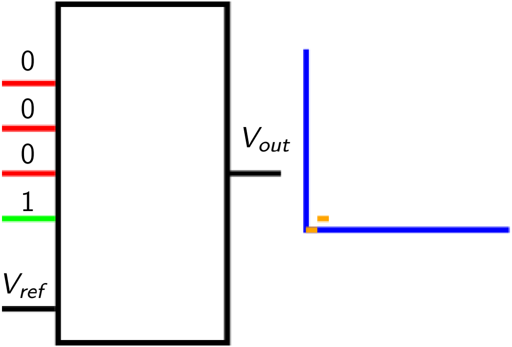

Operation

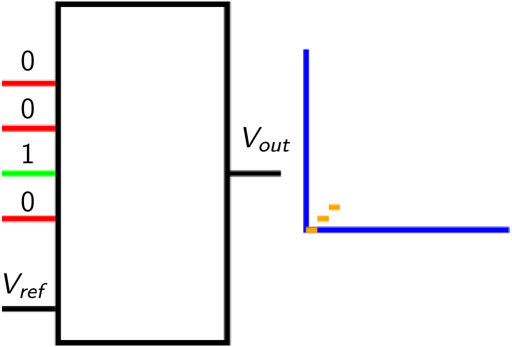

Operation

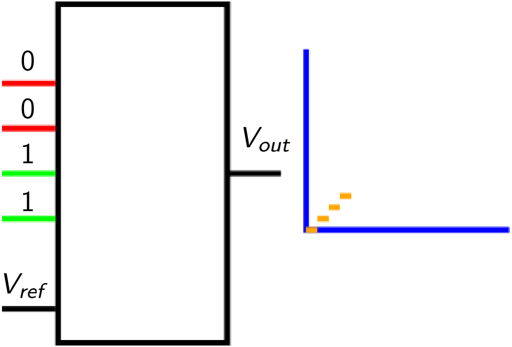

Operation

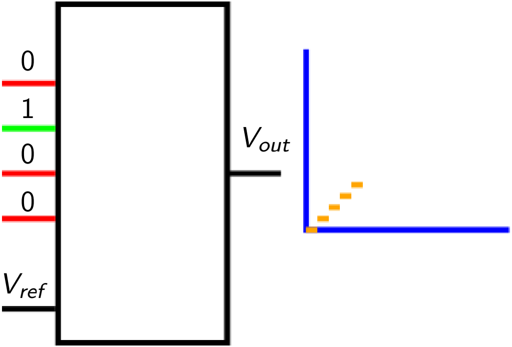

Operation

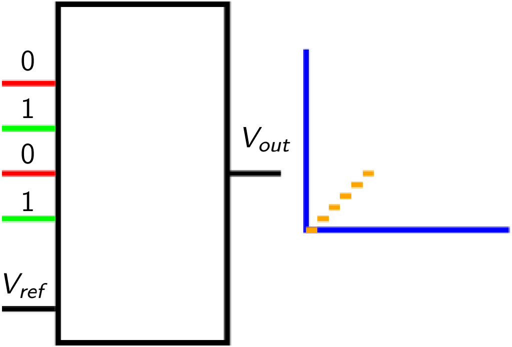

Operation

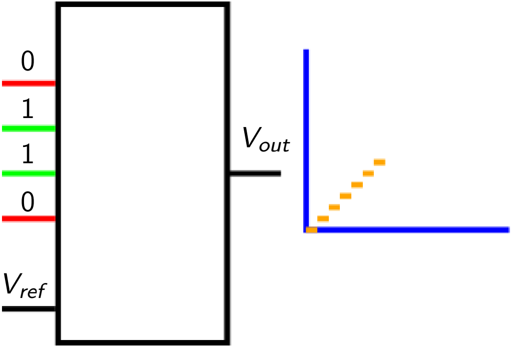

Operation

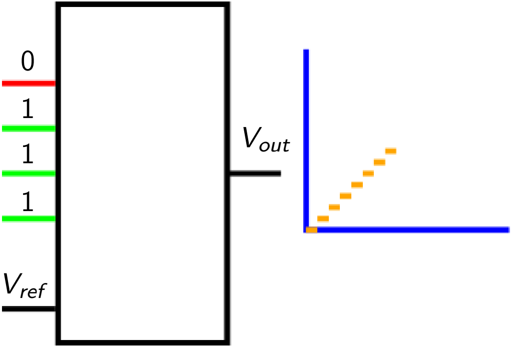

Operation

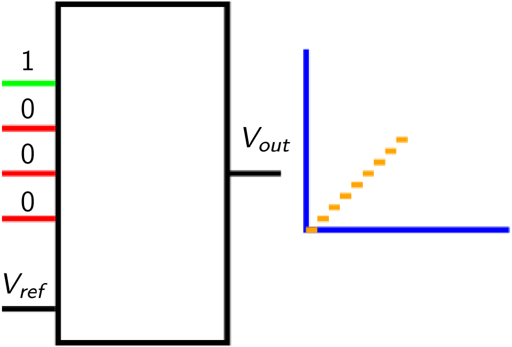

Operation

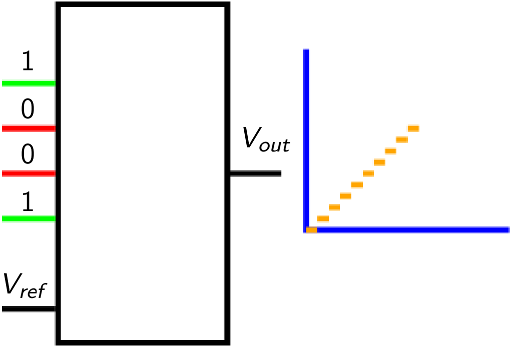

Operation

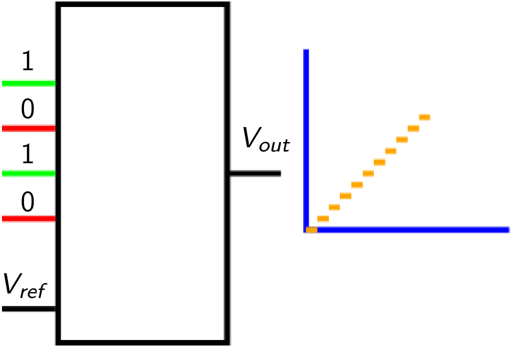

Operation

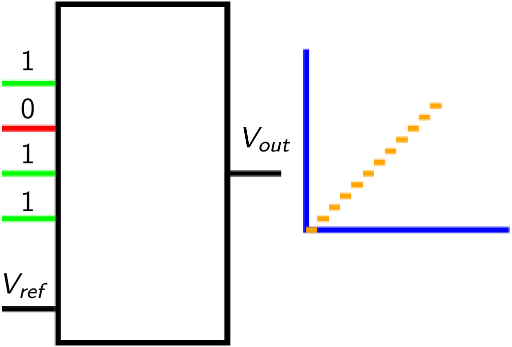

Operation

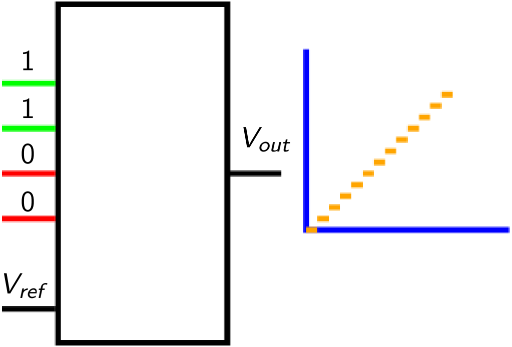

Operation

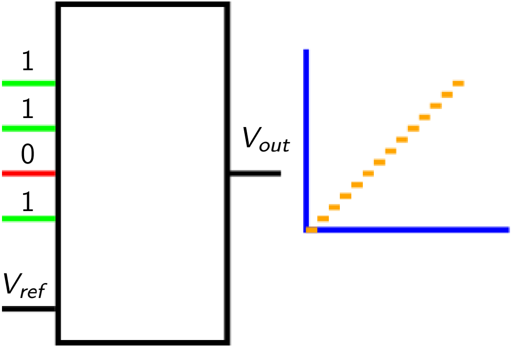

Operation

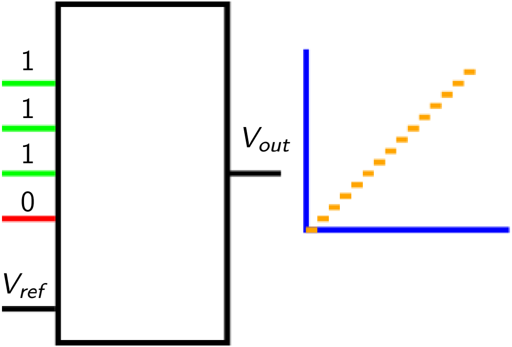

Operation

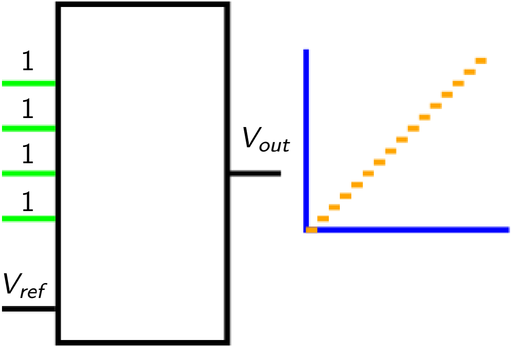

Features

Features

- digital inputs (N)

Features

- digital inputs (N)
- analog reference

Features

- digital inputs (N)
- analog reference
- analog output, (single or complementary)

Features

- digital inputs (N)
- analog reference
- analog output, (single or complementary)
- $V_{out} = n \quad \frac{V_{ref}}{2^N}$, where $n \in [0, 2^N - 1]$

Parameters

Parameters

- resolution

Parameters

- resolution
- settling time

Parameters

- resolution
- settling time
- buffered inputs

Parameters

- resolution
- settling time
- buffered inputs
- power supply sensitivity

Analog to Digital Converter

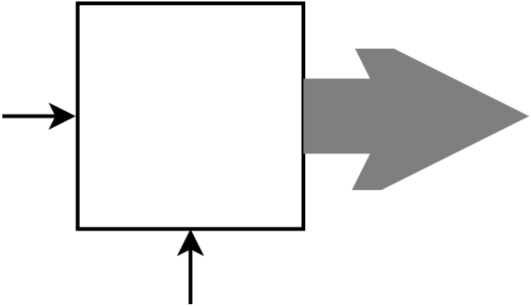

Analog to Digital Converter

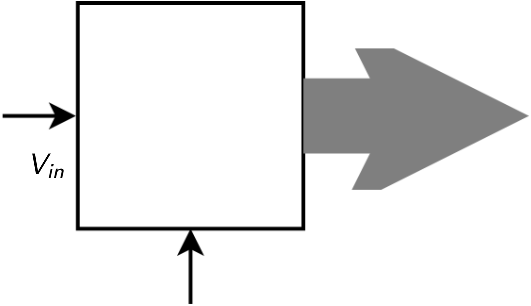

Analog to Digital Converter

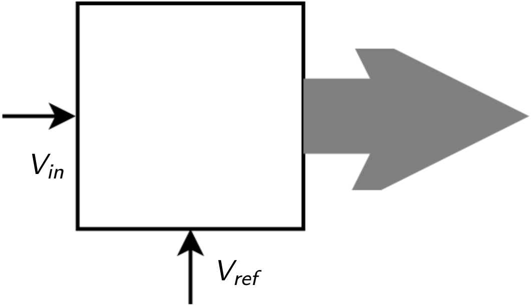

Analog to Digital Converter

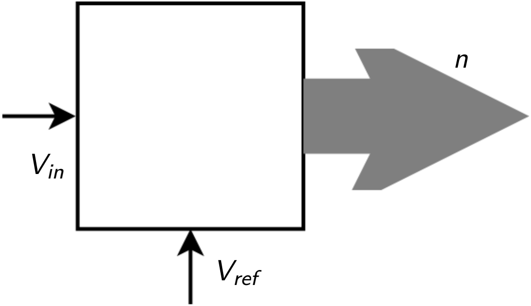

Analog to Digital Converter

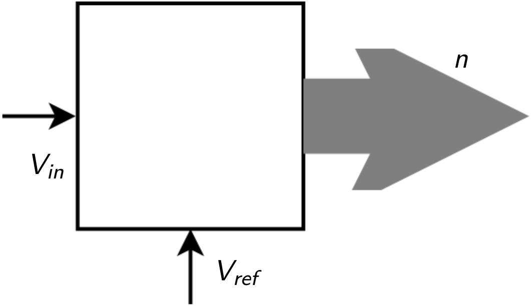

Operation

Operation

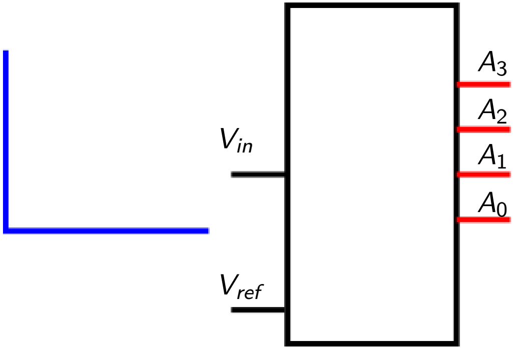

Operation

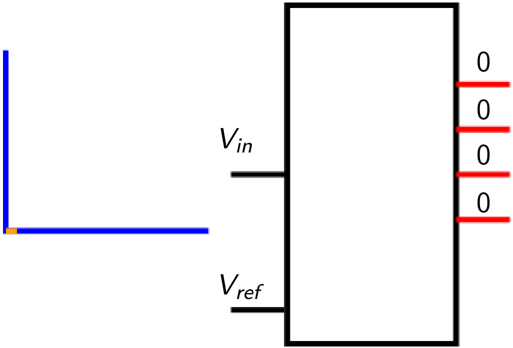

Operation

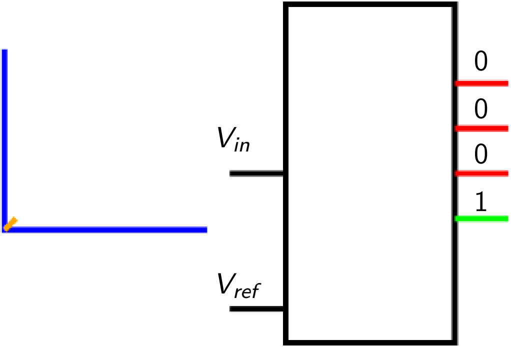

Operation

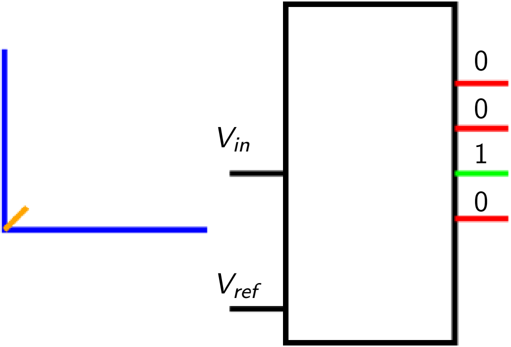

Operation

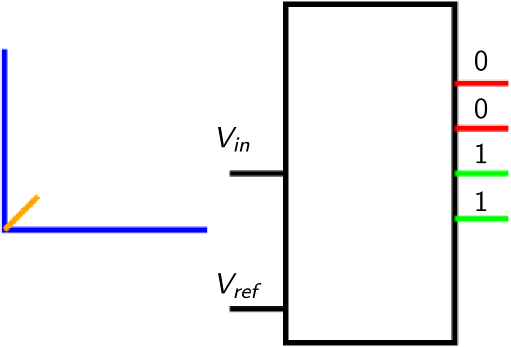

Operation

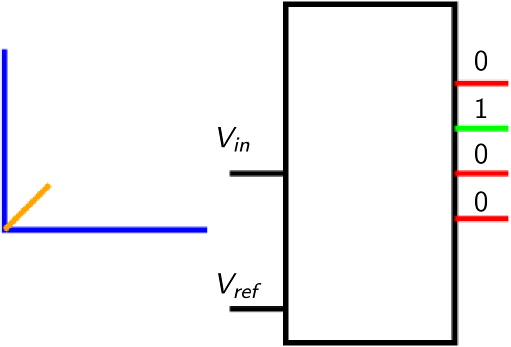

Operation

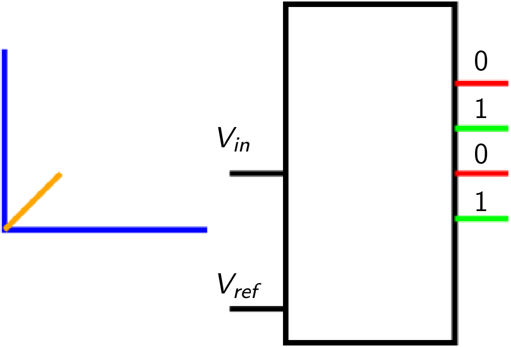

Operation

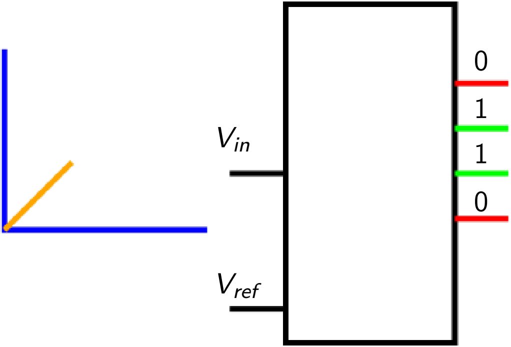

Operation

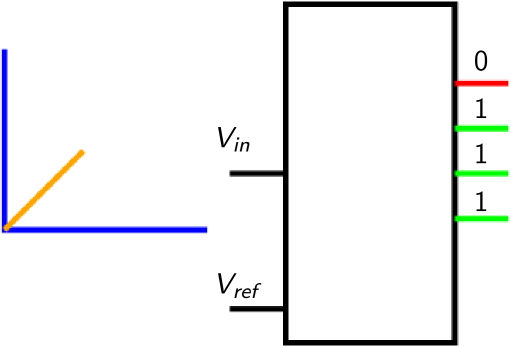

Operation

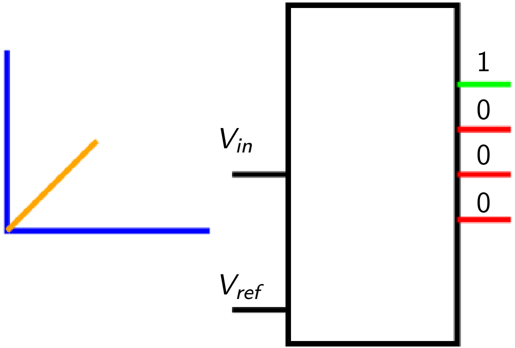

Operation

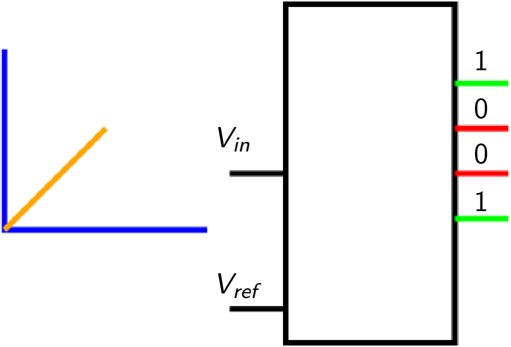

Operation

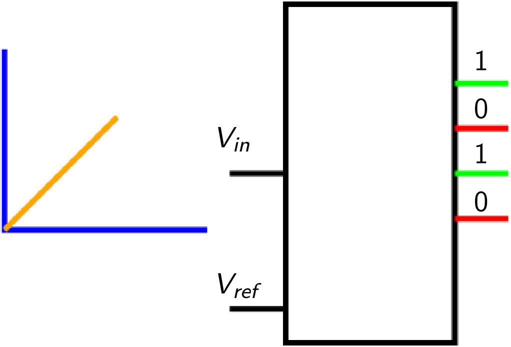

Operation

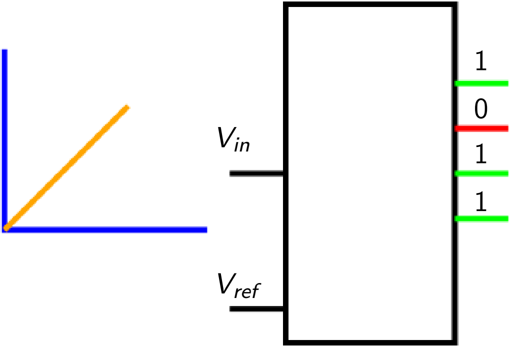

Operation

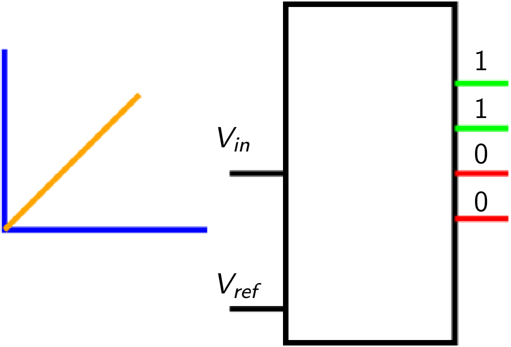

Operation

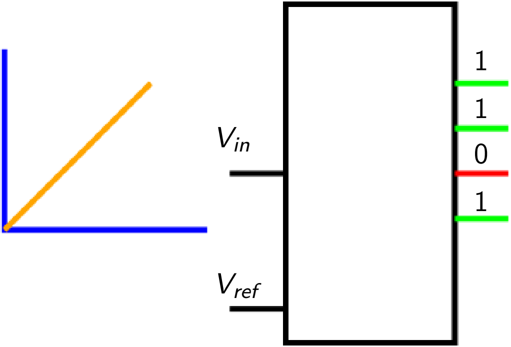

Operation

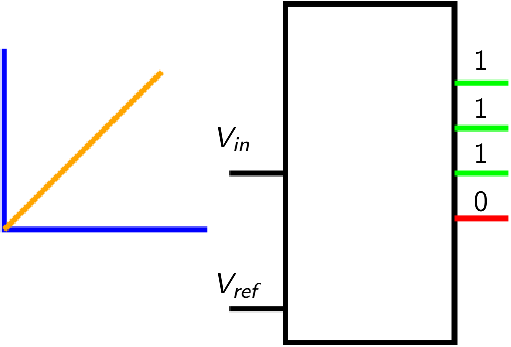

Operation

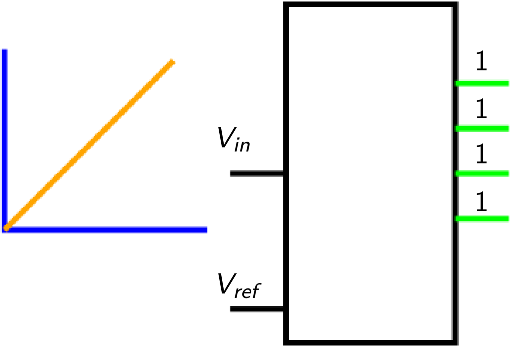

Features

- analog input, (single or differential)

Features

- analog input, (single or differential)
- analog reference

Features

- analog input, (single or differential)
- analog reference
- digital outputs (N)

Features

- analog input, (single or differential)
- analog reference
- digital outputs (N)
- $n = \|2^N \frac{V_{in}}{V_{ref}}\|$, where $n \in [0, 2^N - 1]$

Parameters

Parameters

- resolution

Parameters

- resolution
- conversion time

Parameters

- resolution
- conversion time
- tri-state outputs

Zener diodes

One of the ways to produce a stable reference voltage, such as for an ADC or a DAC, is to use a Zener diode.

Zener diodes

One of the ways to produce a stable reference voltage, such as for an ADC or a DAC, is to use a Zener diode.

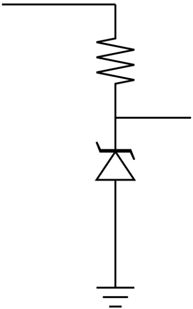

Zener diodes

One of the ways to produce a stable reference voltage, such as for an ADC or a DAC, is to use a Zener diode.

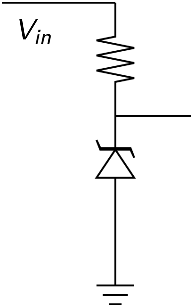

Zener diodes

One of the ways to produce a stable reference voltage, such as for an ADC or a DAC, is to use a Zener diode.

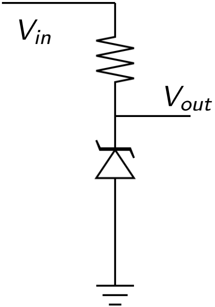

Zener diodes

One of the ways to produce a stable reference voltage, such as for an ADC or a DAC, is to use a Zener diode.

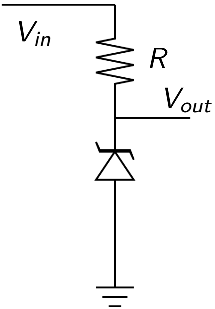

Zener diodes

One of the ways to produce a stable reference voltage, such as for an ADC or a DAC, is to use a Zener diode.

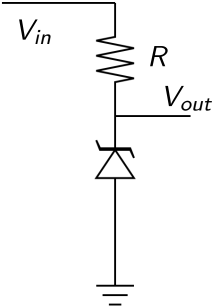

Parameters

Parameters

- Zener voltage

Parameters

- Zener voltage
- required current

Parameters

- Zener voltage
- required current
- temperature sensitivity

Parameters

- Zener voltage
- required current
- temperature sensitivity
- variation with current (ac resistance)

Sample and Hold amplifiers

In the “digital world”, signals change quickly and in large jumps.

Sample and Hold amplifiers

In the “digital world”, signals change quickly and in large jumps. In the “analog world”, usually signals change more slowly and continuously.

Sample and Hold amplifiers

In the “digital world”, signals change quickly and in large jumps. In the “analog world”, usually signals change more slowly and continuously. This often causes problems working with ADCs and DACs.

Sample and Hold amplifiers

In the “digital world”, signals change quickly and in large jumps. In the “analog world”, usually signals change more slowly and continuously. This often causes problems working with ADCs and DACs.

Sample and Hold amplifier

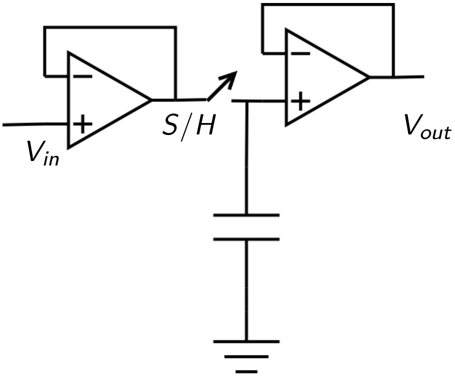

Sample and Hold amplifier

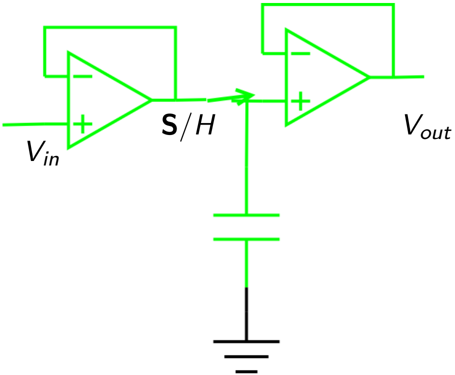

Sample and Hold amplifier

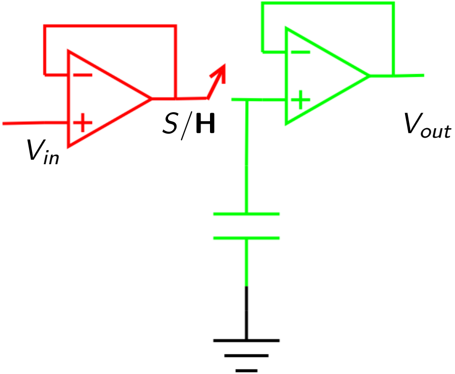

Black box model

Black box model

- analog input

Black box model

- analog input
- analog output

Black box model

- analog input
- analog output
- digital *sample*/*hold* signal

Parameters

Parameters

- acquisition time ($\propto C$)

Parameters

- acquisition time ($\propto C$)
- droop ($\propto 1/C$)

Parameters

- acquisition time ($\propto C$)
- droop ($\propto 1/C$)

Combining these two indicates a trade-off.

Usage

Usage

- with ADC

Usage

- with ADC

  to maintain steady input during conversion

Usage

- with ADC

  to maintain steady input during conversion
- with DAC

Usage

- with ADC

  to maintain steady input during conversion
- with DAC

  to prevent glitches when several input bits change at once

ADC

ADC

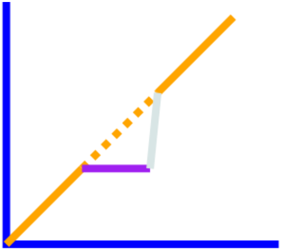

ADC

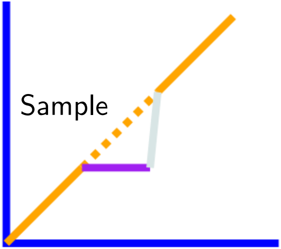

ADC

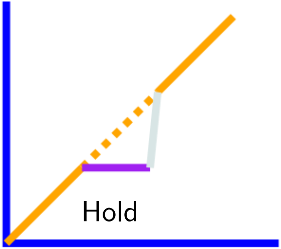

Conversion happens now

ADC

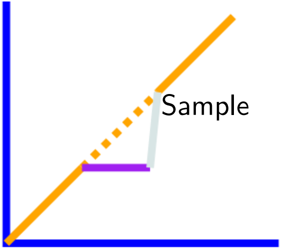

ADC

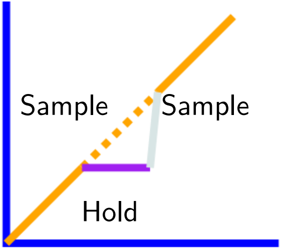

DAC

DAC

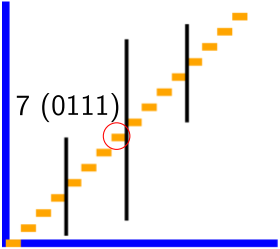

DAC

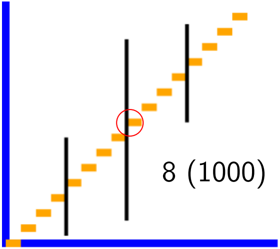

Closeup

Closeup

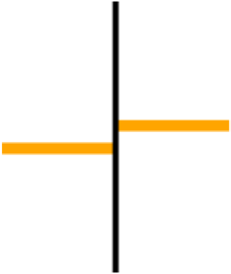

Closeup

Closeup

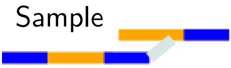

Closeup

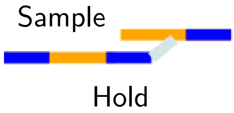

A glitch occuring now won't matter

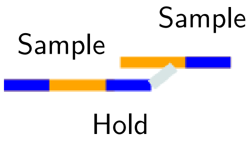Closeup