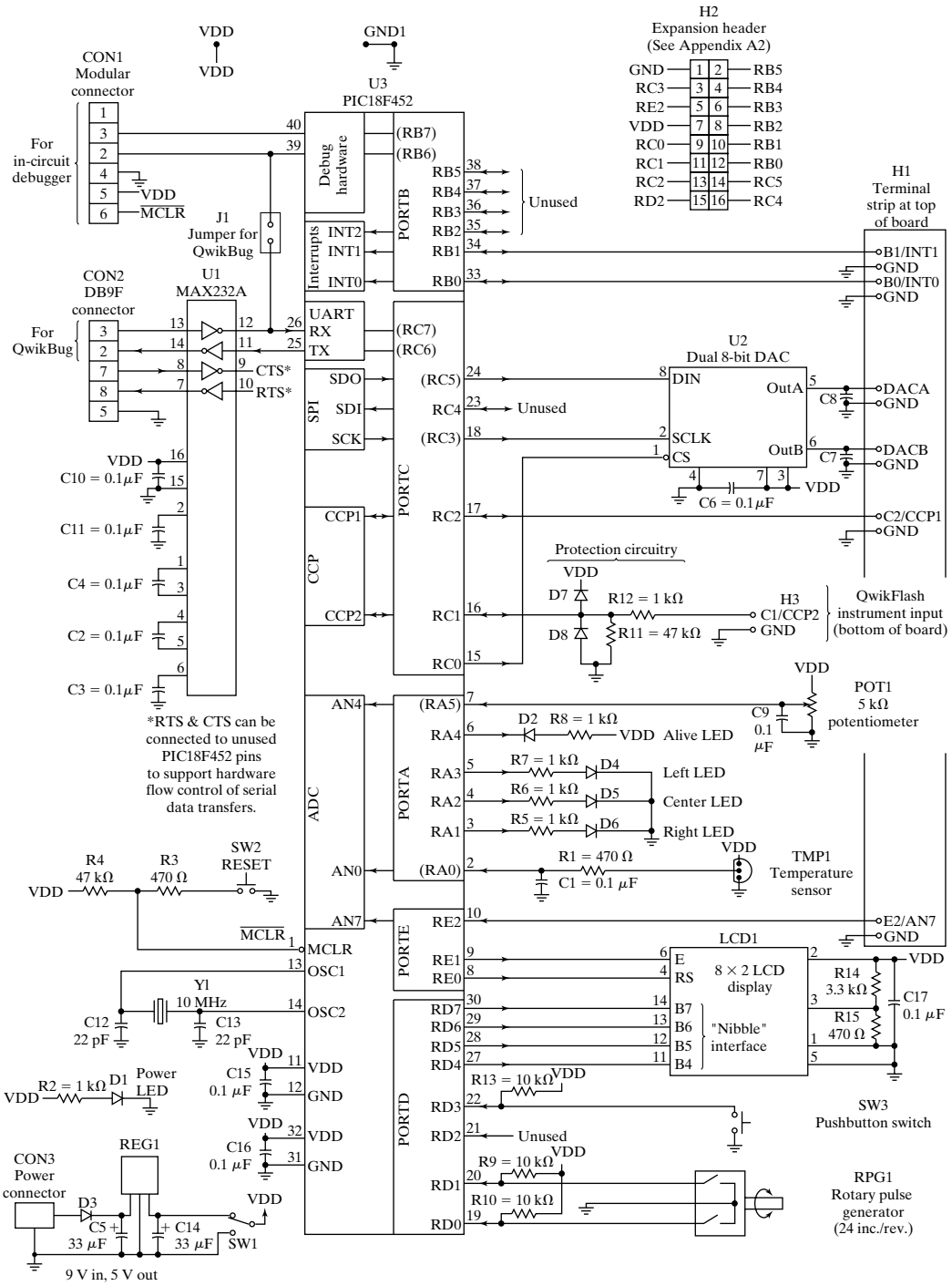

H2
Expansion header
(See Appendix A2)
GND
RC3
RE2
VDD
RC0
RC1
RC2
RD2
RB5
RB4
RB3
RB2
RB1
RB0
RC5
RC4
VDD
VDD
GND1
CON1
Modular
connector
For
in-circuit
debugger
VDD
MCLR
U3
PIC18F452
Debug
hardware
(RB7)
(RB6)
PORTB
RB5
RB4
RB3
RB2
RB1
RB0
Unused
J1
Jumper for
QwikBug
Interrupts
INT2
INT1
INT0
H1
Terminal
strip at top
of board
B1/INT1
GND
B0/INT0
GND
CON2
DB9F
connector
For
QwikBug
U1
MAX232A
UART
RX
TX
(RC7)
(RC6)
CTS*
RTS*
SPI
SDO
SDI
SCK
(RC5)
RC4
(RC3)
Unused
U2
Dual 8-bit DAC
DIN
SCLK
CS
OutA
OutB
C8
C7
DACA
GND
DACB
GND
C6 = 0.1 μF
VDD
C10 = 0.1 μF
C11 = 0.1 μF
C4 = 0.1 μF
C2 = 0.1 μF
C3 = 0.1 μF
CCP
CCP1
CCP2
PORTC
RC2
RC1
RC0
C2/CCP1
GND
Protection circuitry
VDD
D7
D8
R12 = 1 kΩ
R11 = 47 kΩ
H3
C1/CCP2
GND
QwikFlash
instrument input
(bottom of board)
*RTS & CTS can be
connected to unused
PIC18F452 pins
to support hardware
flow control of serial
data transfers.
ADC
AN4
AN0
AN7
PORTA
(RA5)
RA4
RA3
RA2
RA1
(RA0)
D2
R8 = 1 kΩ
VDD
Alive LED
R7 = 1 kΩ
D4
Left LED
R6 = 1 kΩ
D5
Center LED
R5 = 1 kΩ
D6
Right LED
R1 = 470 Ω
C1 = 0.1 μF
VDD
TMP1
Temperature
sensor
C9
0.1
μF
VDD
POT1
5 kΩ
potentiometer
R4
47 kΩ
R3
470 Ω
SW2
RESET
VDD
MCLR
MCLR
OSC1
OSC2
Y1
10 MHz
C12
22 pF
C13
22 pF
PORTE
RE2
RE1
RE0
E2/AN7
GND
LCD1
E
RS
8 × 2 LCD
display
B7
B6
B5
B4
"Nibble"
interface
R14
3.3 kΩ
R15
470 Ω
C17
0.1 μF
VDD
VDD
R2 = 1 kΩ
D1
Power
LED
VDD
C15
0.1 μF
VDD
GND
VDD
C16
0.1 μF
VDD
GND
PORTD
RD7
RD6
RD5
RD4
RD3
RD2
RD1
RD0
R13 = 10 kΩ
VDD
Unused
R9 = 10 kΩ
VDD
R10 = 10 kΩ
SW3
Pushbutton switch
RPG1
Rotary pulse
generator
(24 inc./rev.)
CON3
Power
connector
REG1
D3
C5
33 μF
C14
33 μF
VDD
SW1
9 V in, 5 V out